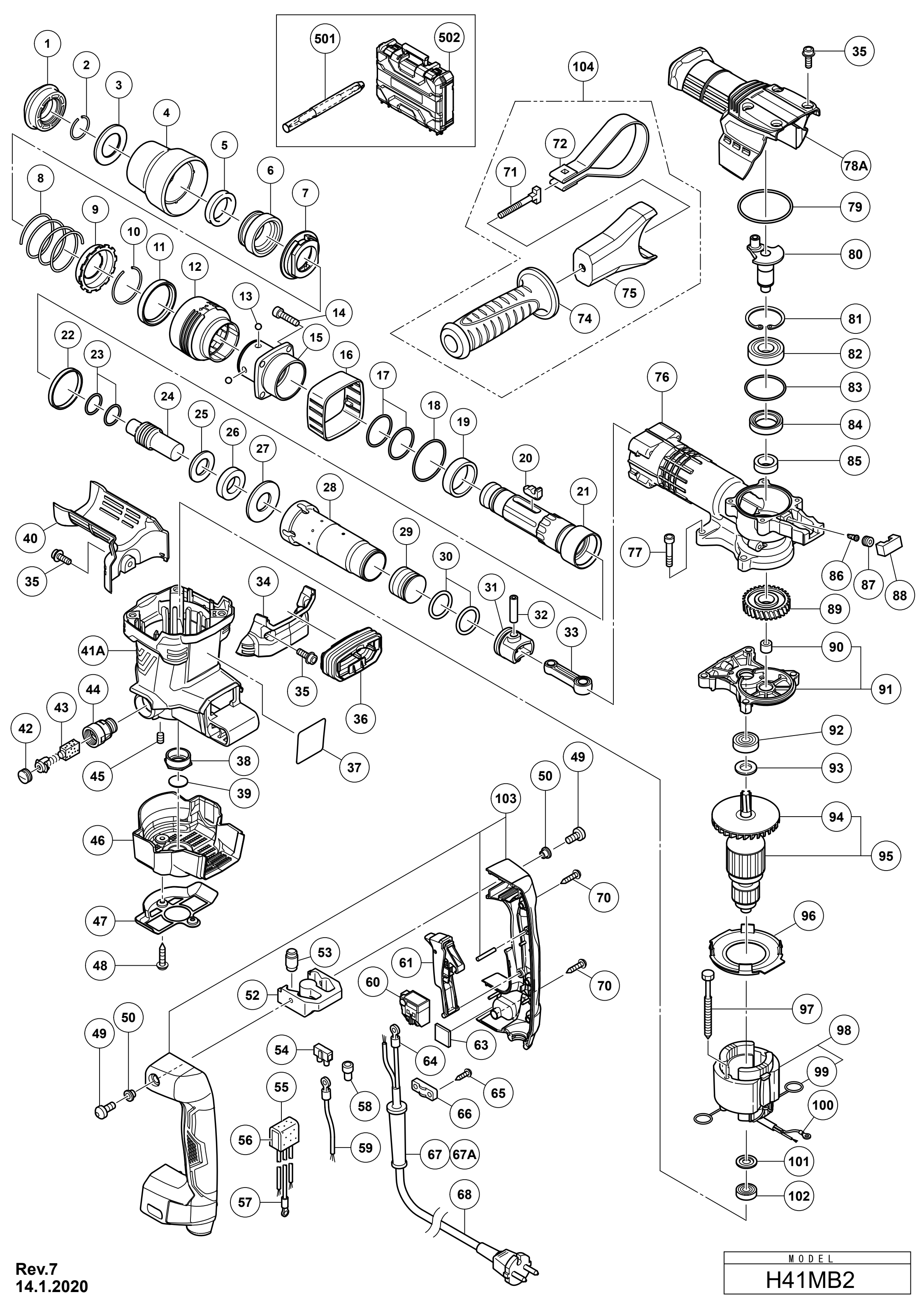

Rev.7
14.1.2020

MODEL
H41MB2